TWO SIMULTANEOUS FAULTS IN MIDDLE VOLTAGE DISTRIBUTION NETWORK

Daniel KOUBA, Lucie NOHÁČOVÁ

ABSTRACT

This paper deals with the method of solution of two simultaneous faults in the middle voltage distribution network, specifically two-port network theory. The main focus of this thesis is on the earth faults, in the resonant earthed neutral system of the middle voltage network and hence simultaneous single-phase earth faults are described in detail. Theoretical formulations are used to solve examples and results are commented.

1. INTRODUCTION

Simultaneous single-phase earth faults can occur at the same or different phases and at the same or different places. The two-port network theory helps to solve many cases of simultaneous faults. It is based on the theory of symmetrical components for basic unbalanced faults. The use of this method is limited by the principle of superposition to linear systems only and assumption is a phase reference A. However, any phase could be chosen as the reference, but the choice of phase A results in the simplest mathematical derivations. The aim of the detailed analysis of the simultaneous faults is to detect the size and character of the fault currents, and to find factors which affect its size. The theoretical solution of simultaneous faults will be an initial basis for a further analysis of methods for reducing residual fault current, specifically shunt resistor.

2. WO-PORT NETWORK AND SIMULTANEOUS FAULTS

By the application of the theory of two-ports it is possible to extend the method of symmetrical components to calculate the fault at two nodes in the network. Apart from a single fault, this method also enables us to determine the conditions for any type of fault in a different location in the network. Generally we can use this method for the same or different types of two simultaneous faults, i.e. open-circuit and short-circuit faults, single-phase or multiphase.

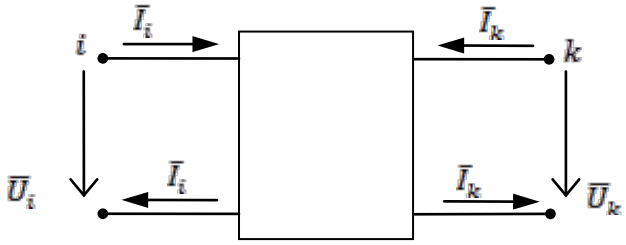

Fig.1 General two port

Figure 1 illustrates a general two-port with the positive direction of currents and voltages. The positive direction, which is defined, is essential for the theory of two-ports. This two-port can be described by a system of two equations expressing the input and output voltage:

$$\begin{bmatrix} \bar{U}_{i\_j} \\ \bar{U}_{k\_m} \end{bmatrix} = \begin{bmatrix} \bar{Z}_{11} & \bar{Z}_{12} \\ \bar{Z}_{21} & \bar{Z}_{22} \end{bmatrix} \cdot \begin{bmatrix} \bar{I}_{i\_j} \\ \bar{I}_{k\_m} \end{bmatrix}; \quad \bar{\boldsymbol{U}} = \bar{\boldsymbol{Z}}\,\bar{\boldsymbol{I}} \tag{1}$$

Where $\bar{\boldsymbol{Z}}$ is the impedance parameters (or z-parameters) of two-port. Admittance, hybrid and inverse hybrid parameters can be made depending on the types of faults (more details in [1]). However, we need only z-parameters for the calculation of two simultaneous single-phase earth faults in this paper. The question is how to identify the z-parameters matrix elements, which will be equivalent to the network problems.

2.1 Impedance parameters

In the case of radially operated networks, the calculation of fault currents in two points is not complicated. Equivalent impedances to each point of fault are given by the sum of the impedance from the power supply to the fault, i.e. input and output impedance of two-port ($\bar{Z}_{ii}$, $\bar{Z}_{kk}$).

These impedances to individual fault points can be usefully divided into the parts, where both fault currents pass through and a part affected by only one fault current. Part of the network with both the fault currents actually represents transfer impedances that are identical, i.e. $\bar{Z}_{ik} = \bar{Z}_{ki}$.

For example, two distribution lines with a fault supplied from a transformer station E-HV (Extra-high voltage) to MV (Middle-voltage): The common part affecting the state in both fault locations will be the equivalent impedance of power supply node of E-HV network and the impedance of a supply transformer. The impedances of each line will form parts which are affected by only one of the fault currents. It is not necessary to include other middle-voltage lines to the equivalent circuit because we assume the fault currents do not pass through them. This explanation is shown in Figure 2 below.

It is important to note that in case of unbalanced faults we have to consider the calculation of symmetrical components in the positive, negative and zero sequence systems. The case of transformer stations with two distribution lines suggests the use of T-pad type two-port.

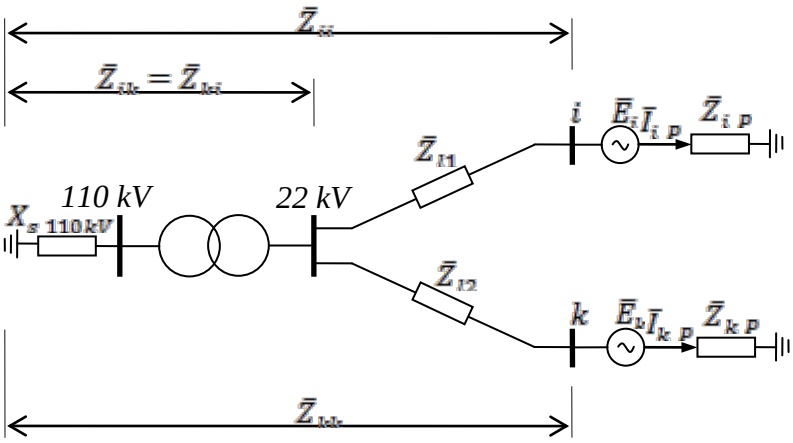

Fig.2 Example of a radial network

2.2 Equivalent circuit

Every sequence components system must have its own two-port. Positive sequence is active. Negative and zero sequences are passive and thus do not contain power sources under the condition of balanced phasors of supply voltages. As we anticipate two faults, we have to include two power sources at two different nodes in the network. If we take the network as shown in Figure 2, then positive sequence and negative sequence two-ports will look like this:

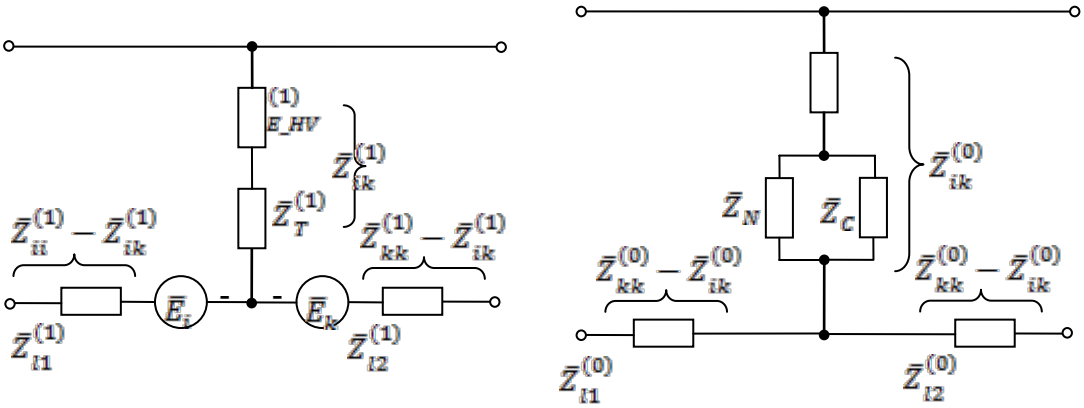

a) Positive sequence *b) Zero sequence*

Fig.3 Positive and negative sequence

Two-port negative sequence system is approximately the same as the positive sequence system with the exception of power source. Further, we separate the input and output

terminals of sequence two-port networks via isolation transformers. Ratio of these isolation transformers is 1:1 under the condition of reference phase A and it may include a phase shift equal to $\bar{a} = e^{j120}$ or $\bar{a}^2 = e^{j240}$. If the condition of reference phase A is not met, it is necessary to rotate the phasors of voltages and currents in the affected phase using phase shift in such a way that the phase angle will be identical with the reference phase A. This is achieved by changing ratio of isolation transformers ($\bar{a}^2 : 1$ or $\bar{a} : 1$) for positive and negative sequence system using the following picture:

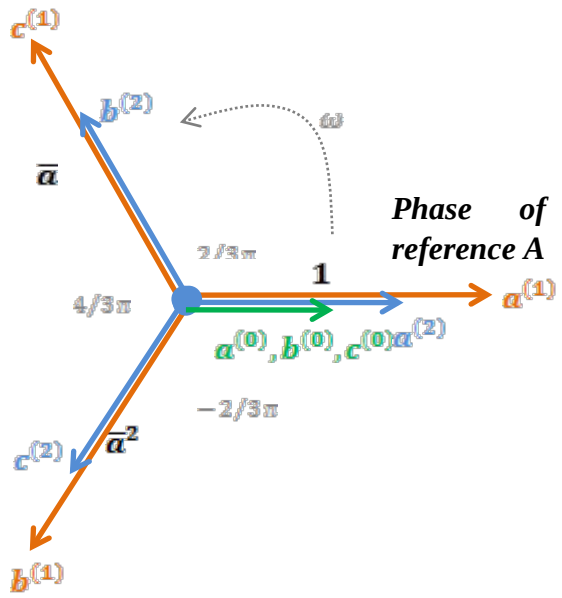

Fig.4 Settings of ratio of isolation transformers

The ratio of isolation transformer of zero sequence systems are always 1:1.
We have already mentioned that two simultaneous single-phase earth faults are characterized by z-parameters. The series connection of component systems applies to both of these faults. This means that the resulting interconnection input and output terminals of sequence two-ports will be analogously serial. The resulting equivalent circuit of two simultaneous single-phase earth faults is shown in the next Figure:

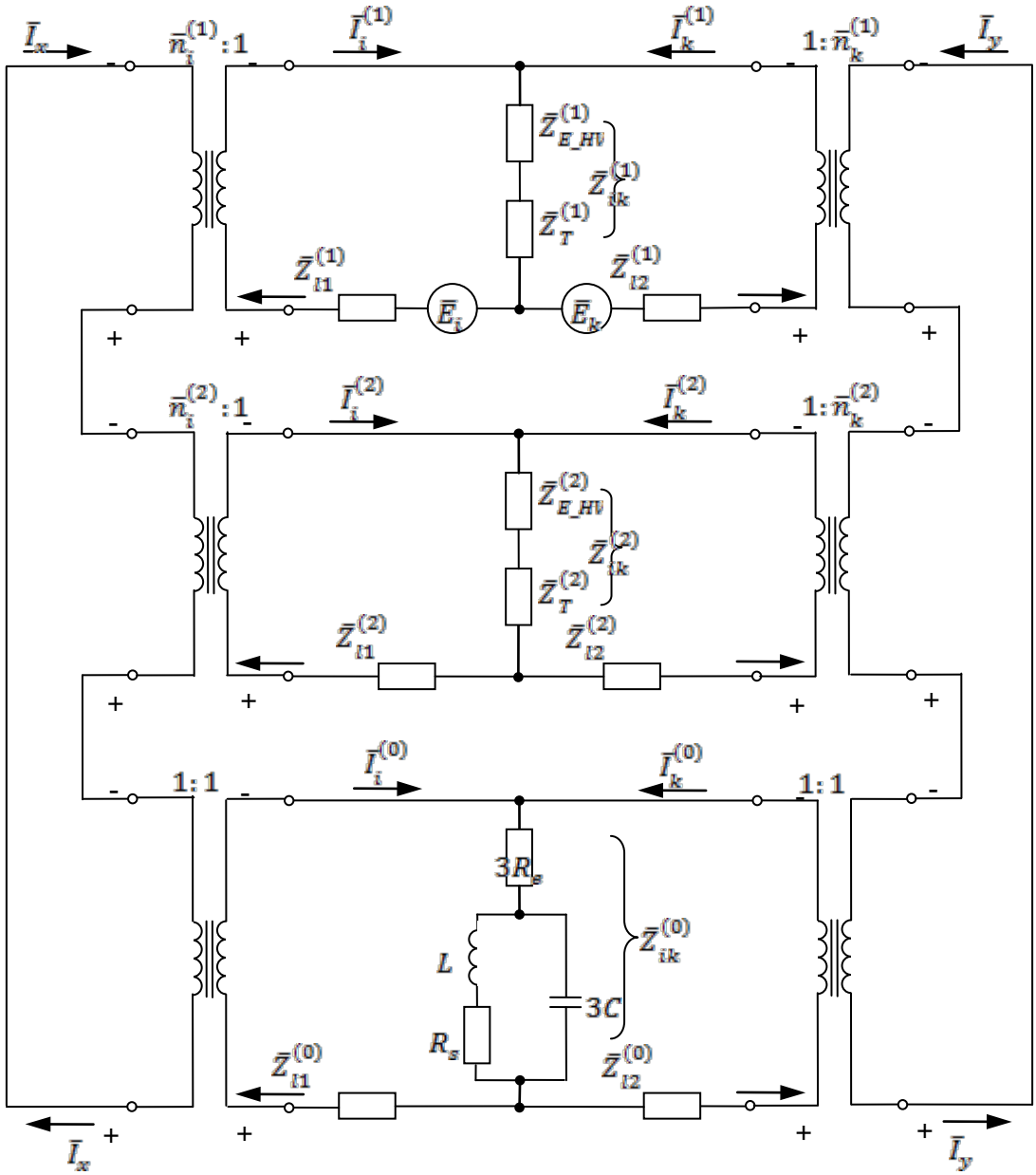

Fig.5 The resulting equivalent circuit

Mathematical description of the equivalent circuit can be found for example in [4].

3. CALCULATIONS OF SELECTED FAULTS

The network (which was) subjected to the calculation of two simultaneous single-phase earth faults has the following default parameters:

Supply E-HV node:

$\bar{Z}^{(1)}_{E\_HV} = \bar{Z}^{(2)}_{E\_HV} = 0.0278 + 0.278 * j$(to MV side, corresponds to $\bar{I}''_{k\,3f\,110\,kV} = 10\ kA$);

Supply transformer 110/22 kV:

$\bar{Z}^{(1)}_{T} = \bar{Z}^{(2)}_{T} = 0{,}138 + 2{,}324 * j$

MV distribution line:

R_1 = 0,245 Ω/km; R_0 = 0,525 Ω/km;

L_1 = 0,92 mH/km; L_0 = 5,34 mH/km;

Capacitive current (by C in the Figure 3): 220 A;

Resistance of the earthing system: R_e = 5 Ω;

Leakage current resistance and compensation coil resistance: R_s = 2 Ω;

Distance from supply transformer to fault at node i: 10 km

Distance from supply transformer to fault at node k: 20 km

As shown in Figure 3, the replacement scheme was further completed by shunt reactor consisting of a parallel resonant circuit with the network capacity (slightly out of tune) representing resonant earthed neutral system and the resistance of the earthing system.

3.1 Simultaneous two single-phase earth faults (at different phases, i.e. cross-country earth-fault)

We can see in the resulting phasors diagrams the phase-to-neutral voltage at node *i* try to achieve the phase-to-phase voltage, but a second fault in node *k* in a different phase deforms the voltage and decreases the voltage in the second affected phase. The phasors of voltage of the affected phase at the node *k* is in phase opposition with the phasors of voltage at node *i* and also the fault currents at different nodes in the network are in the phase opposition. These diagrams resemble two-phase short-circuit fault.

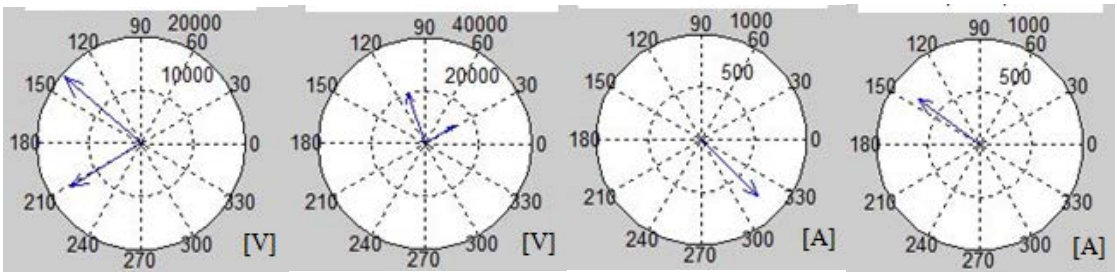

Node *i*	Node *k*	Node *i*	Node *k*
Phase-to-phase voltage		Fault currents	

Fig.6 Phasors diagrams of two simultaneous single-phase-earth faults (at different phases)

3.2 Simultaneous two single-phase earth faults (at the same phases)

Furthermore, we can simulate the single-phase fault in the same phase at the both nodes by changing ratio of the isolation transformers pursuant to the above mentioned theory. The first computation is without shunt reactor for the isolated neutral system and then with the shunt reactor for resonant earthed neutral system.

As we can see in the following Figure 7, the voltages of affected phases are zero at the both nodes. Phase-to-neutral voltages of healthy phases rise to phase-to-phase voltages. Fault currents have the capacitive character and are divided between two nodes in the ratio 2:1.

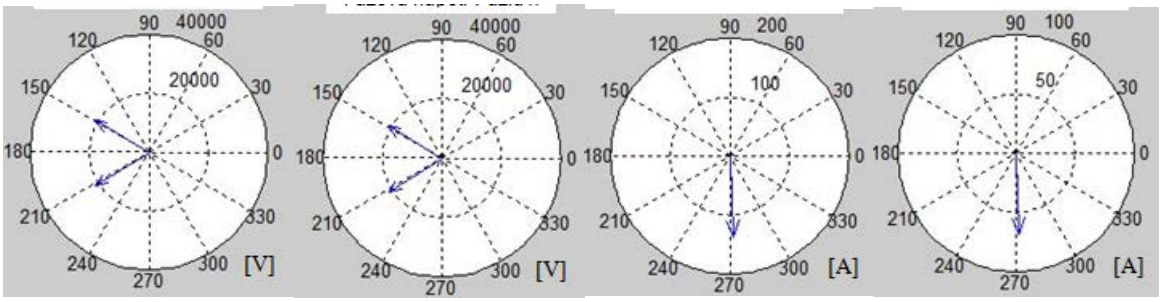

Node *i*	Node *k*	Node *i*	Node *k*
Phase-to-phase voltage		Fault currents	

Fig.7 Phasors diagrams of simultaneous two single-phase-earth faults (at the same phases) isolated neutral system

The following figure shows the resulting diagrams with the shunt reactor.

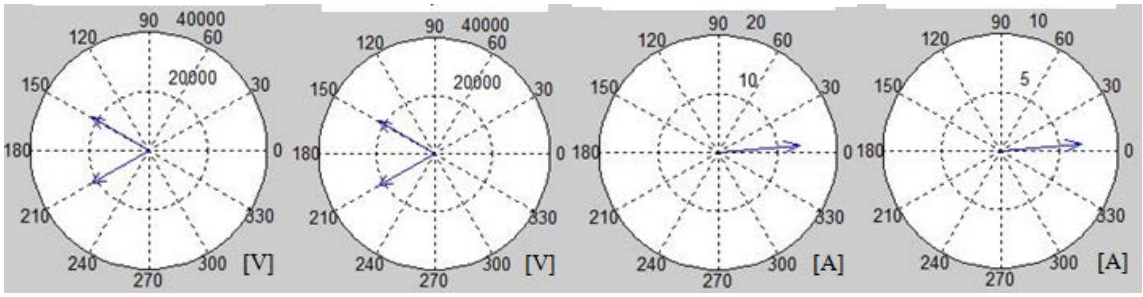

Node *i*	Node *k*	Node *i*	Node *k*
Phase-to-phase voltage		Fault currents	

Fig.8 Phasors diagrams of simultaneous two single-phase-earth faults (at the same phases) resonant earthed neutral system

Shunt reactor does not affect the character or size of the voltages during the fault. In contrast, phasors of currents are almost the real (slightly higher inductive character) and their size is about 10x smaller than in the previous case. The ratio of 2:1 has remained the same.

4. CONCLUSION

The two-port network theory applied to the symmetrical components provides a transparent solution of two simultaneous faults. The formation of equivalent circuit and elements of the matrix $\overline{\mathbf{Z}}$ was derived. The computation of any affected phase via ratio of the isolation transformers was also explained. Then we demonstrated the theoretical derivation in the practical calculation of two simultaneous faults in the middle voltage network. Fault currents of simultaneous faults were divided according to the line lengths considering the use of the same cross-section of lines, the common power transformer and resistance of earthing system. The inclusion of fault resistance would significantly affect the size of fault currents for both solved nodes. The theoretical solution of simultaneous faults will be an initial basis for the further analysis of methods for reducing residual fault current in resonant earthed neutral system, specifically shunt resistor.

5. LITERATURE

[1] Tziouvaras, D., "Analysis of Complex Power System Faults and Operating Conditions", *Schweitzer Engineering Laboratories, Inc.*, TP6327-01, 2008.

[2] Anderson, M., P., "Analysis of Simultaneous Faults by Two-Port Network Theory", *IEEE Transactions on Power Apparatus and Systems*, Vol. 90, No 5, pp. 2199–2205, Sept. 1971.

[3] J. H. Naylor etal., *Power System Protection Vol 1 – Principles and Components 2nd ed.*, The Institution of Electrical Engineers, London, United Kingdom, 1995, ISBN 0 85296 834 5

[4] Kouba, D., "Problematika vybraných simultánních poruch v síti vysokého napětí", *Proceedings Conference ELEN 2012*, 11 th - 12 th September 2012, CTU in Prague, ISBN 978-80-01-05096-5

[5] K. Máslo: Systémové poruchy v elektrizační soustavě - technicko fyzikální pohled, sborník 8. mezinárodní konference Electric Power Engineering (ISBN 978-80-248-1391-2), Dlouhé Stráně červen 2007

[6] Caldon, R.; Rossetto, F.; Turri, R.; "Temporary islanded operation of dispersed generation on distribution networks," Universities Power Engineering Conference, 2004. UPEC 2004. 39th International , vol.3, no., pp. 987- 991 vol. 2, 6-8 Sept. 2004

[7] Martínek, Z., Královcová, V.: The Solution for Repairable Units, článek ve sborníku , 11-th International Scientific Conference EPE 2010, Brno, Electric Power Engineering, 2010, Česká republika, ISBN 978-80-214-4904-4

[8] Hejtmáková, P., Dvorský, E.: The Network configuration Effect on Extraordinery States in the Power System, 4. mezinárodní vědecká konference „Elektro 2001“ Žilina, květen 2001, ISBN 80-7100-836-2, pp. 222-225

[9] Síťař, V.: Modelování venkovního vedení v programu DYNAST. Článek ve sborníku Elektrotechnika a informatika 2010, část 3. Plzeň ZČU 2010. ISBN 978-80-7043-915-9

6. ACKNOWLEDGEMENT

This work is supported by a student research project SGS-2012-047 and Project TA 01020865.

AUTHORS' ADDRESS

Dipl- Ing. Daniel Kouba daniel.kouba@eon.cz Tel: + 420 733670171
Specialist for distribution grid computing Network management Eon, Czech Republic

Doc. Dipl-Ing. Lucie Noháčová Ph.D. nohacova@kee.zcu.cz Tel: + 420 377634358
University of West Bohemia in Pilsen, Faculty of Electrical Engineering, Czech Republic, Department of Electric Power Engineering and Ecology